XP010PT

	XP010PT
Frequency	50 / 60 Hz
Voltage	230 V~ 1N
Electrical power	1,5 kW
Plate Dimensions	N° 1 250x250 mm
Dimensions	331x176x458 mm
Weight	10 kg

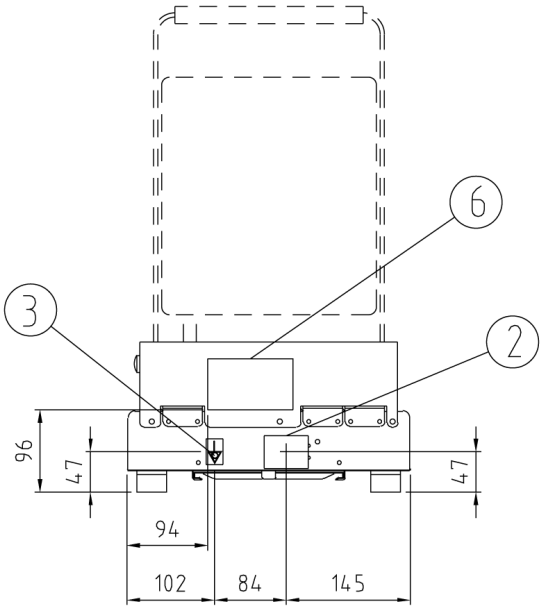
6
3
2
96
47
47
94
102
84
145

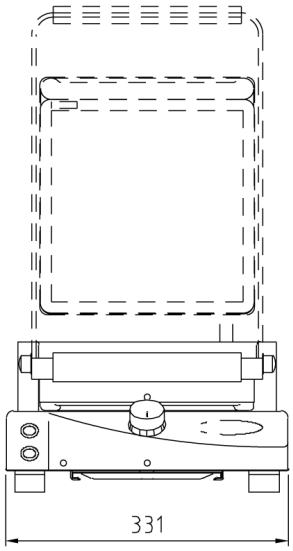
331

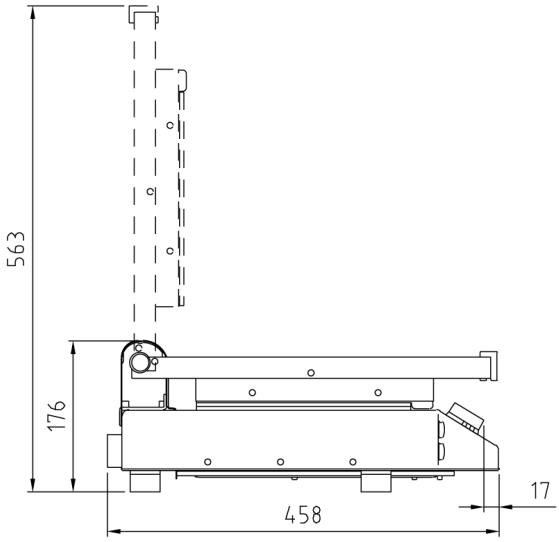
563
176
17
458

SpidoCook™

	Manual	Digital
COOKING METHOD		
Contact and infrared cooking with variable temperature from 120 °C to 400 °C	•	-
Contact and infrared cooking with variable temperature from 0 °C to 300 °C	-	•
HEATING SYSTEM SHB		
SHB Technology: heating filament at 800 ° C with the emission of infrared rays	•	•
SHB Technology: heating element placement grants uniform temperature across the cooking surface	•	•
SHB Technology: thin filament for ultra fast heating	•	•
SHB.Plus Technology: more power to reduce the heating time and increasing speed of cooking	o	•
INSULATION AND SAFETY		
Protek.SAFE™ Technology: maximum thermal efficiency and safety at work (cool outer surfaces and without sharp corners)	•	•
Protek.SAFE™ Technology: containment of heat loss through thick insulation fiber glass	•	•
Protek.SAFE™ Technology: maintain the temperature with minimal energy consumption	•	•
COOKING SURFACE		
Self-balancing of the upper cooktops with a patented movement for greater food-contact surface	•	•
Non-porous hygienic handles with anatomical design for a optimal and secure grip	•	•
Special glassceramic resistant to thermal and mechanical shocks	•	•
CLEANING & HYGIENE		
Smooth non-porous glass ceramic surfaces anti odor	•	•
Glassceramic non-stick surfaces for easy cleaning	•	•
Metal scraper included for cleaning	•	•
Drain connected to the liquid collection tray	•	•
Liquid waste collection tray with great capacity	•	•
AUXILIARY FUNCTIONS		
Two programs can be stored	-	•
Cooking temperature setting by the user for each program	-	•
Displaying the time required to finish the cooking program set	-	•
Display of nominal and real temperature of the cooking surface	-	•
Continuous working «INF»	•	•
Light indicator with LED Lighting	•	•
User-selectable temperature units in °C or °F	•	•
TECHNICAL DETAILS		
External coating in stainless steel high strength with rounded edges for maximum hygiene and cleanliness	•	•
Side covers anti dirt traps	•	•
Control board SpidoTouch sealed to prevent infiltration of fat in the electronic card	-	•
Structure light weight - heavy duty with the use of innovative materials	•	•
Main power switch	•	•
Self-diagnostic system to detect problems or failures	•	•
Safety temperature limiter	•	•