XVC205E

	XVC205E
Capacity	5 GN 2/3
Pitch	67 mm
Frequency	50 / 60 Hz
Voltage	230 V ~ 1N / 400 V ~ 3N
Electrical power	3,4 / 5,1 kW
Dimensions	574x773x708
Weight	48 kg

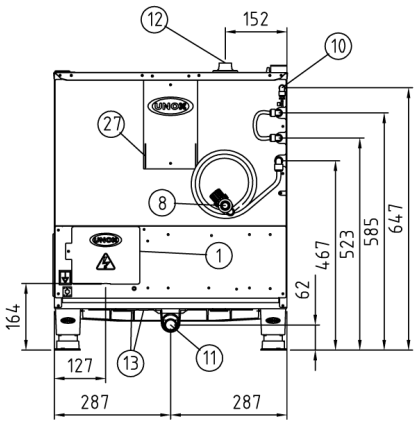
12
152
10
27
8
1
164
127
13
11
287
287
62
467
523
585
647

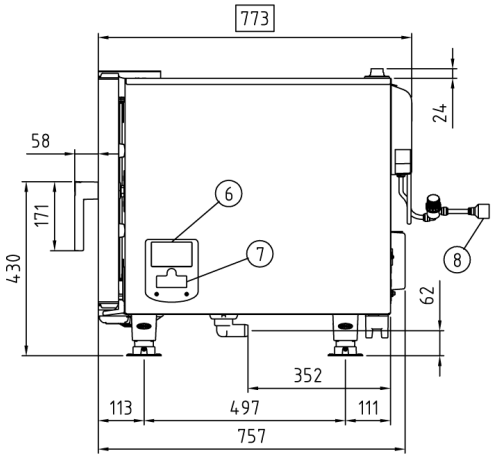
773
24
58
171
430
6
7
8
62
352
113
497
111
757

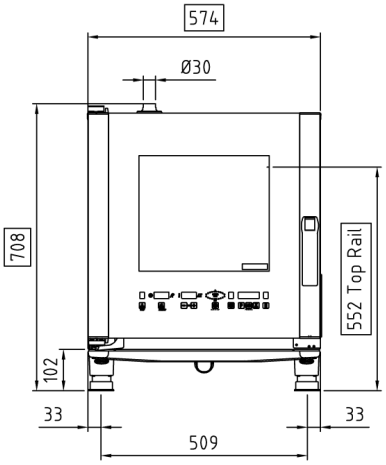
574
Ø30
708
552 Top Rail
102
33
33
509

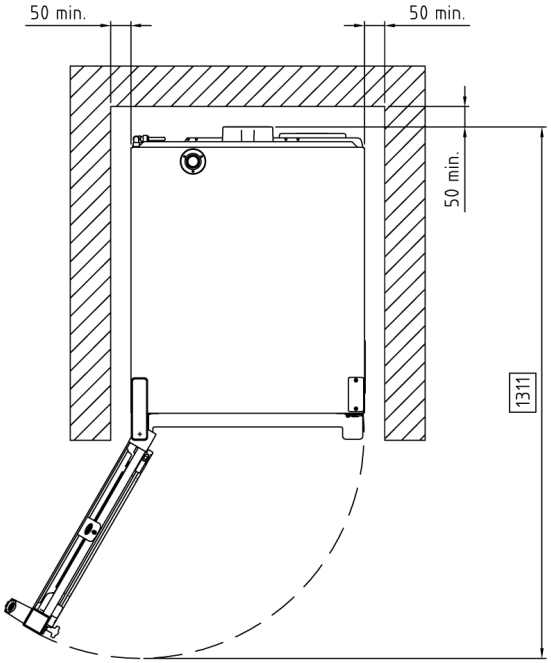
50 min.
50 min.
50 min.
1311

UNOX®

ChefTop™

	ECO	POWER	GAS
COOKING MODES			
Convection cooking 30 °C - 260 °C	•	•	•
Mixed steam and convection cooking 48 °C - 260 °C, with STEAM.Maxi™ 30% to 90%	•	•	•
Mixed humidity and convection cooking 48 °C - 260 °C, with STEAM.Maxi™ 10% to 20%	•	•	•
Steaming 48 °C - 130°C with STEAM.Maxi™ technology	•	•	•
Dry air cooking 30°C - 260 °C with DRY.Maxi™ technology settable 10% to 100%	•	•	•
Maximum pre-heating temperature 280 °C	•	•	•
Core probe	•	•	•
Delta T cooking with core probe	•	•	•
MULTI.Point core probe	o	•	•
SOUS-VIDE core probe	o	o	o
MULTI.Time: technology to manage up to 9 timers to bake at the same time different products	•	•	•
AIR DISTRIBUTION IN THE COOKING CHAMBER			
AIR.Maxi™ technology: multiple fans with reversing gear	•	•	•
AIR.Maxi™ technology: 6 air speeds, programmable	•	•	•
AIR.Maxi™ technology: 1 semi static cooking mode, programmable	•	•	•
AIR.Maxi™ technology: puase function	•	•	•
CLIMA MANAGEMENT IN THE COOKING CHAMBER			
DRY.Maxi™ technology: high performance moist and humidity extraction, programmable by the user	•	•	•
DRY.Maxi™ technology: cooking with humidity extraction 30 - 260 °C	•	•	•
STEAM.Maxi™ technology: steaming 48 °C - 130 °C	•	•	•
STEAM.Maxi™ technology: combination of moist air and dry air 48 °C- 260 °C	•	•	•
ADAPTIVE.Clima technology: cavity humidity measurement and regulation	•	•	•
ADAPTIVE.Clima technology: repeatability of the cooking process through the momorization of the real cooking process	•	•	•
ADAPTIVE.Clima technology: 20 ADAPTIVE.Clima process memory	•	•	•
COOKING COLUMNS WITH MAXI.Link TECHNOLGY			
MAXI.Link technology: creating multiple ovens and accessories columns controlled by a single ChefTouch control panel	•	•	•
MAXI.Link technology with EFFICIENT.Power: power requirement reduced on MAXI.Link columns	•	•	•
THERMAL INSULATION AND SAFETY			
Protek.SAFE™ technology: maximum thermal efficiency and working safety (cold door glass and external surfaces)	•	•	•
Protek.SAFE™ technology: fan impeller brake to contain energy loss at door opening	•	•	•
Protek.SAFE™ technology: electrical power absorbtion related to the real needs	•	•	-
Protek.SAFE™ technology: gas power absorbtion related to the real needs	-	-	•
HIGH PERFORMANCE ATMOSPHERIC BURNER			
Spido.GAS™ technology: high performance straight heat exchanger pipes for a simmetric heat distribution	-	-	•
Spido.GAS™ technology: straight heat exchanger pipes for an easy service	-	-	•
AUTOMATIC CLEANING			
Rotor.KLEAN™: 4 automatic and 2 semi-automatic washing programs	•	•	•
PATENTED DOOR			
Door hinges made of high durability and self-lubricating techno-polymer (only for lateral opening door)	•	•	•
Reversible door, even after the installation (not for 20 GN 2/1 and 20 GN 1/1 models)	•	•	•
Door docking positions at 60°-120°-180°	•	•	•
AUXILIARIES FUNCTIONS			
99 cooking programs memory, each one made of 9 cooking steps	•	•	•
Possibilty to assign a name to the stored programs	•	•	•
Preheting temperature up to 280 °C settable by the user	•	•	•
Visualization of the residual cooking time (when cooking not using the core probe)	•	•	•

Holding cooking mode «HOLD»	•	•	•
Continuous functioning «INF»	•	•	•
Visualization of the set and real values of time, core probe temperature, cavity temperature and humidity	•	•	•
«COOL» function for rapid cavity cooling	•	•	•
Temperature unit settable in °C or °F	•	•	•
TECHNICAL DETAILS			
Rounded stainless steel AISI 304 cavity for hygiene and easy of cleaning	•	•	•
LED lights	•	•	•
Steam proof sealed ChefTouch control panel	•	•	•
High-durability carbon fibre door lock	•	•	•
Door drip pan with continuous drainage, even when the door is open	•	•	•
High capacity appliance drip pan connectable to appliance drain	•	•	•
Light weight – heavy duty structure using innovative materials	•	•	•
Proximity door contact switch	•	•	•
2-stage safety door lock	o	o	o
Autodiagnosys system for problems or brake down	•	•	•
Safety temperature switch	•	•	•
Openable internal glass to simplify the door cleaning	•	•	•
Stainless steel C-shaped rack rails with notched recesses for easy loading	•	•	•